ITEM NO.	PART NUMBER	DESCRIPTION	QTY.
1	PLATE BEAM 1.5IN BLANK Z1 R1	SPACER PLATE, NO TRANSITION	80
2	PLATE BEAM 1.5IN EW Z1 R1	EAST TO WEST TRANSITION PLATE	180
3	PLATE BEAM 1.5IN NS Z1 R1	NORTH TO SOUTH TRANSITION PLATE	180
4	Beam W14x730 Z0 1	W14X730 BEAM, BELOW Z=0	1000
5	Plate Beam Z0 1	MOUNTING PLATE FOR Z0 W14 BEAM	1600
6	Bolt 4.0x13tpi 9.5in		6400
7	Nut 4.0x13tpi		6400
8	Washer 4in 0.125		12800
9	Mortar Leveling 1	MORTAR TO LINE-UP ALL BEAMS	200
10	Plate Beam Z1 1	W14X730 BEAM, #Z1	200
11	C10 to Beam Sup 1	EAST/WEST PANEL ATTACHMENT (NORTH TO SOUTH)	28
12	93673A525	18-8 Stainless Steel Headless Clevis Pin	112
13	TS8x4x0.1875 Rec Tube 1	C10 SUPPORT	56
14	91152A033	SPACER/WASHER ANGLED	112
15	Washer Level 0.5in C10 R1	SPACER/WASHER/ANGLED	112
16	Washer Spacer 0.5in R1	SPACER/WASHER	112
17	TS8x2x0.1875 Rec Tube 1	C10 SUPPORT	56
18	C10 to Beam Sup 1	NORTH/SOUTH PANEL ATTACHMENT (EAST TO WEST)	28
19	Plate Beam Z0 1	MOUNTING LEVELING PLATE FOR Z0 W14 BEAM	200
20	Concrete base 85mx67m		1
21	Concrete base Pad 12in	LEVELING PAD ATOP BEDROCK	1
22	Rebar G60 N18 20ft		10140
23	Rebar tie wire 2mm ID-117mm 7.5turns		10140
24	Rebar G60 N18 8.7ft		780
25	Rebar G60 N9 20ft		36212
26	Rebar tie wire 2mm ID-59mm 7.5turns		37648
27	Rebar G60 N9 8.7ft	VERTICAL OR HORIZONTAL	3192
28	Rebar G60 N9 11ft		2032
29	Rebar tie wire 2mm ID-116mm 13turns		26416

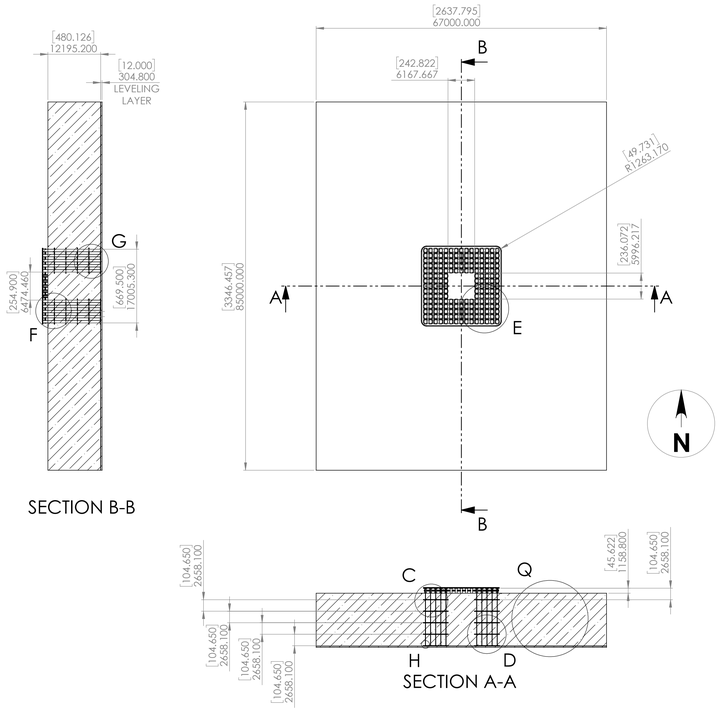

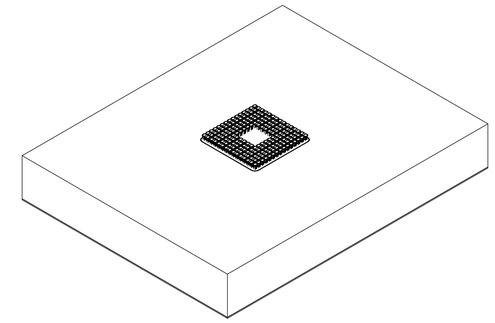

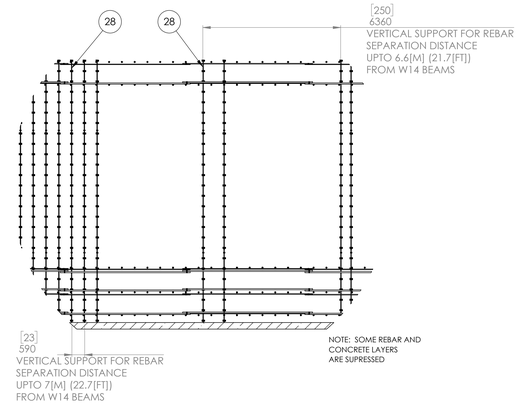

DETAIL Q
SCALE 1 : 100

NOTES)
(1) CONCRETE STRENGTH 34.5[MPA] (5,000[PSI])
  (1) TOTAL DEPTH DEPENDENT ON DEPTH OF BEDROCK
    (1) SEPARATE STUDY REQUIRED
  (2) LEVELING LAYER DEPENDENT ON BEDROCK CONDTION AND FORMATION/S
  (3) LEVELING MORTAR PER ASTM C270/C1714 - TYPE M, 172[MPa] (25[KSI])
(2) CORROSION RESISTANCE IS REQUIRED
  (1) ELECTROPLATING (EP): PREFERRED OVERALL, MINIMUM THICKNESS 25[µM] (0.001[IN])
  (2) THERMAL SPRAY: PREFERRED FOR TOUCH-UPS
  (3) ZINC PAINTS: AREAS WITH PAINT NEED TO BE LOGGED FOR MAINTENANCE
  (4) HOT DIP GALVINIZING, AVERAGE THICKNESS 85[µM] (0.0033[IN]) (WHERE EP IS NOT POSSIBLE)
(3) W14 BEAM/S ASSEMBLIES: ASTM A913 G65, GALVINIZED
(4) C10 CHANNELS: ASTM A572-50, GALVINIZED
(5) INTERCONNECTING PLATES: ASTM A913 G65, GALVINIZED
(6) REBAR: ASTM A615 G60, GALVINIZED
(7) BOLTS: ASTM F3125 (A490), TYPE 3, GALVINIZED
(8) STEEL PARTS AND PINS: ASTM A572 G50, GALVINIZED
(9) ALUMINUM PARTS AND PINS: ASTM B209 6061-T6 OR 7075-T6
(10) ALUMINUM PANELS AND ITS PARTS: ASTM B209 7075-T6
(11) BEAM HORIZONTAL ALIGNMENT 0.001[DEG], 0.29[MM] (0.011[IN]) OVER 16.5[M]
(12) BEAM VERTICAL ALIGNMENT 0.00[DEG], 12.9[MM] (0.507[IN]) OVER 738[M]
  (1) CENTER, HOLE - TO- HOLE, ALIGNMENT OVER 6.1[M] (20[FT]) IS 0.1[MM] OR 0.004[IN]
(13) SEE A1-0001 FOR ARCHITECTURAL REQUIRMENT/S
(14) W14 CONNECTION PLATE/S
  (1) BOLT CLEARANCE HOLES PREFERRED 6[MM] (0.25[IN]) LARGER THAN BOLT OR PIN
  (2) MATING FACES MAY HAVE THIN LAYER OF OIL APPLIED
(15) CONCRETE SLOPE MINIMUM 0.25[DEG] AWAY FROM BASE
(16) GAGES TO BE CONSTRUCTED PER TEMPERATURE SPECIFICATION (15[C] OR 59[F])

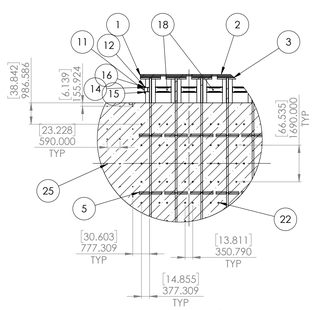

DETAIL C
SCALE 1 : 100

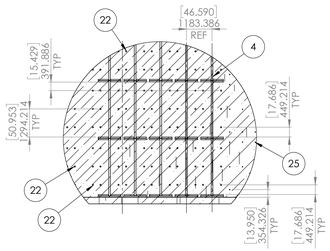

DETAIL D
SCALE 1 : 100

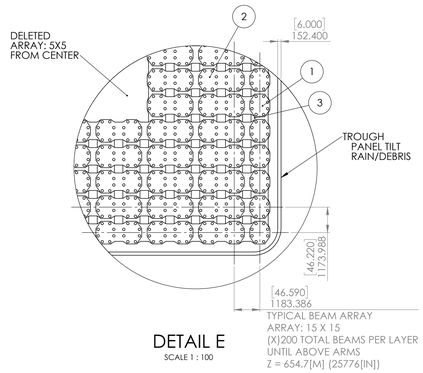

DETAIL E
SCALE 1 : 100

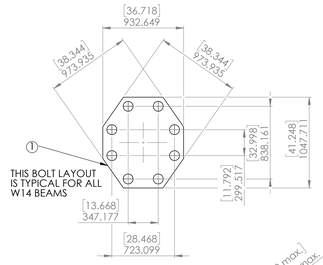

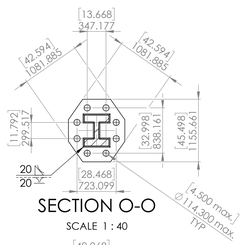

SECTION O-O
SCALE 1 : 40

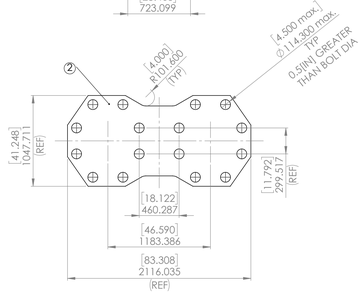

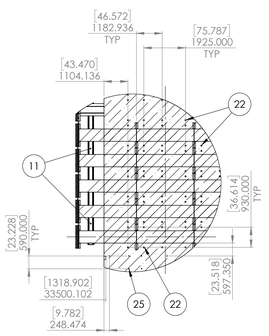

DETAIL F
SCALE 1 : 100

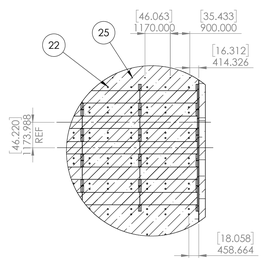

DETAIL G
SCALE 1 : 100

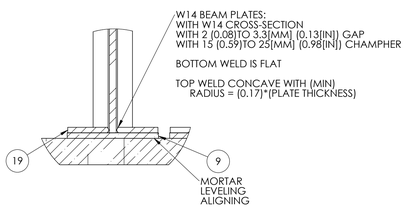

DETAIL H
SCALE 1 : 25

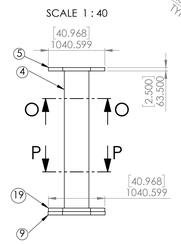

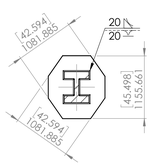

SECTION P-P
SCALE 1 : 40

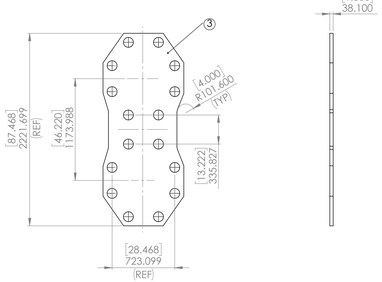

	W14 BEAM/PLATE THICKENSS [MM]	W14 BEAM/PLATE THICKENSS [IN]	TRANSITION PLATE THICKENSS [MM]	TRANSITION PLATE THICKENSS [IN]	MAXIMUM ALTITUDE FOR PLATE USEAGE [M]	MAXIMUM ALTITUDE FOR PLATE USEAGE [FT]
W14X730	63.5	2.50	38.1	1.50	111.0	364.30
W14X550	57.15	2.25	38.1	1.50	172.0	564.30
W14X455	50.8	2.00	31.8	1.25	233.0	764.30
W14X370	44.45	1.75	31.8	1.25	367.1	1,204.30
W14X257	38.1	1.50	25.4	1.00	452.4	1,484.30
W14X193	19.05	0.75	12.7	0.50	738.0	2,421.26

UNLESS OTHERWISE SPECIFIED:
DIMENSIONS: [MM] - [IN]
ALL TOLERANCES:
MEASURED/GAGED AT 15[C] (59[F])
EQUIRANCES: (+/-)0.01[IN]

LOCATION: FRANCE, NORMANDY, DOZULE THE HOLY HILL 49°11'21.29"N 0°25'08.07"W
A1: ARCHITECTURE, CLASS x
A2: CIVIL, CLASS x
M: MECHANICAL, CLASS x
S: STRUCTURAL, CLASS x

DEBURR AND BREAK SHARP EDGES

	NAME	SIGNATURE	DATE
DRAWN			
CHK'D			
APPV'D			
MFG			
Q.A.			

MATERIAL: SEE NOTES
WEIGHT:

DO NOT SCALE DRAWING
REVISION

CREO DESIGN

TITLE:
FOUNDATION ASM
DESIGN CRITERIA
CONCRETE/REBAR
BEAMS AND PLATES

DWG NO. C1-S1-0001
A0
SCALE:1:500
SHEET 1 OF 2

ITEM NO.	PART NUMBER	DESCRIPTION	QTY.	ITEM NO.	PART NUMBER	DESCRIPTION	QTY.
1	Beam W14x730 Z0 1	W14X730 BEAM, BELOW Z=0	1	1	Beam W14x730 Z0 1	W14X730 BEAM, BELOW Z=0	1
2	Plate Beam Z0 1	MOUNTING PLATE FOR Z0 W14 BEAM	1	2	Plate Beam Z0 1	MOUNTING PLATE FOR Z0 W14 BEAM	1
3	Bolt 4.0x13tpi 9.5in		8	3	Bolt 4.0x13tpi 9.5in		8
4	Nut 4.0x13tpi		8	4	Nut 4.0x13tpi		8
5	Washer 4in 0.125		16	5	Washer 4in 0.125		16
6	Plate Beam Z1 1	W14X730 BEAM, #Z1	1	6	Plate Beam Z1 1	W14X730 BEAM, #Z1	1
7	C10 to Beam Sup 1	EAST/WEST PANEL ATTACHMENT (NORTH TO SOUTH)	2	7	C10 to Beam Sup 1	NORTH/SOUTH PANEL ATTACHMENT (EAST TO WEST)	2
8	93673A525	18-8 Stainless Steel Headless Clevis Pin	4	8	93673A525	18-8 Stainless Steel Headless Clevis Pin	4
9	91152A033	SPACER/WASHER ANGLED	4	9	TS8x4x0.1875 Rec Tube 1	C10 SUPPORT	4
10	Washer Level 0.5in C10 R1	SPACER/WASHER/ANGLED	4	10	91152A033	SPACER/WASHER ANGLED	4
11	Washer Spacer 0.5in R1	SPACER/WASHER	4	11	Washer Level 0.5in C10 R1	SPACER/WASHER/ANGLED	4
12	TS8x2x0.1875 Rec Tube 1	C10 SUPPORT	4	12	Washer Spacer 0.5in R1	SPACER/WASHER	4

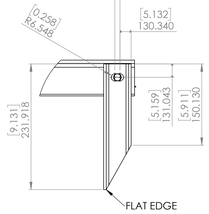

DETAIL N
SCALE 1 : 4

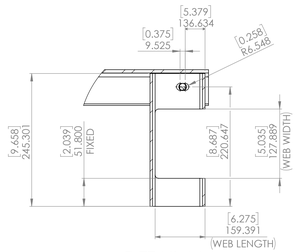

DETAIL M
SCALE 1 : 4

BEAM TO TS8X4X(3/16)"	WEB WIDTH [MM]	WEB WIDTH [IN]	WEB LENGTH [MM]	WEB LENGTH [IN]
W14X730	127.89	5.04	92.08	3.63
W14X665	117.98	4.65	89.03	3.51
W14X605	108.84	4.29	86.04	3.39
W14X550	100.20	3.95	83.31	3.28
W14X500	92.08	3.63	80.90	3.19
W14X455	84.71	3.34	78.68	3.10
W14X426	80.26	3.16	76.90	3.03
W14X370	70.74	2.79	74.10	2.92
W14X257	51.18	2.02	68.01	2.68
W14X193	39.75	1.57	64.39	2.54

NOTES)
(1) CORROSION RESISTANCE IS REQUIRED
  (1) ELECTROPLATING (EP): PREFERRED OVERALL, MINIMUM THICKNESS 25[μM] (0.001[IN])
  (2) THERMAL SPRAY: PREFERRED FOR TOUCH-UPS
  (3) ZINC PAINTS: AREAS WITH PAINT NEED TO BE LOGGED FOR MAINTENANCE
  (4) HOT DIP GALVINIZING, AVERAGE THICKNESS 85[μM] (0.0033[IN]) (WHERE EP IS NOT POSSIBLE)
(2) W14 BEAM/S ASSEMBLIES: ASTM A913 G65, GALVINIZED
(3) C10 CHANNELS: ASTM A572-50, GALVINIZED
(4) INTERCONNECTING PLATES: ASTM A913 G65, GALVINIZED
(5) BOLTS: ASTM F3125 (A490), TYPE 3, GALVINIZED
(6) STEEL PARTS AND PINS: ASTM A572 G50, GALVINIZED
(7) ALUMINUM PARTS AND PINS: ASTM B209 606I-T6 OR 7075-T6
(8) ALUMINUM PANELS AND ITS PARTS: ASTM B209 7075-T6
(9) BEAM HORIZONTAL ALIGNMENT 0.001[DEG], 0.29[MM] (0.011[IN]) OVER 16.5[M]
(10) BEAM VERTICAL ALIGNMENT 0.001[DEG], 12.9[MM] (0.507[IN]) OVER 738[M]
  (1) CENTER, HOLE - TO- HOLE, ALIGNMENT OVER 6.1[M] (20[FT]) IS 0.11[MM] OR 0.004[IN]
(11) SEE A1-0001 FOR ARCHITECTURAL REQUIRMENT/S
(12) W14 CONNECTION PLATE/S
  (1) BOLT CLEARANCE HOLES PREFERRED 6[MM] (0.25[IN]) LARGER THAN BOLT OR PIN
  (2) MATING FACES MAY HAVE THIN LAYER OF OIL APPLIED
(13) GAGES TO BE CONSTRUCTED PER TEMPERATURE SPECIFICATION (15[C] OR 59[F])

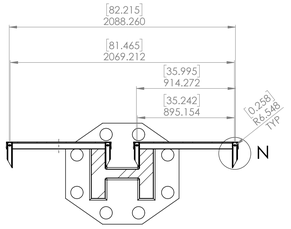

SECTION K-K

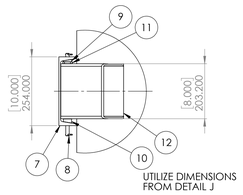

DETAIL I
SCALE 1 : 8

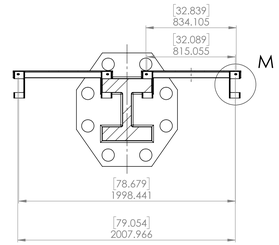

SECTION L-L

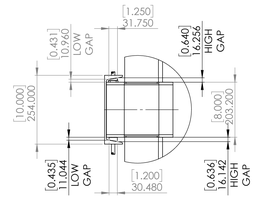

DETAIL J
SCALE 1 : 8

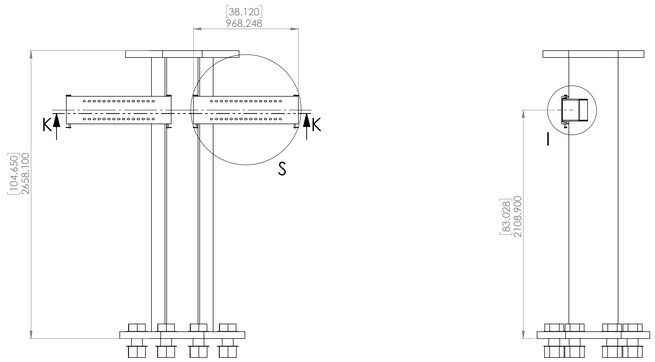

EAST/WEST PANEL ATTACHMENT
RUNNING NORTH TO SOUTH)

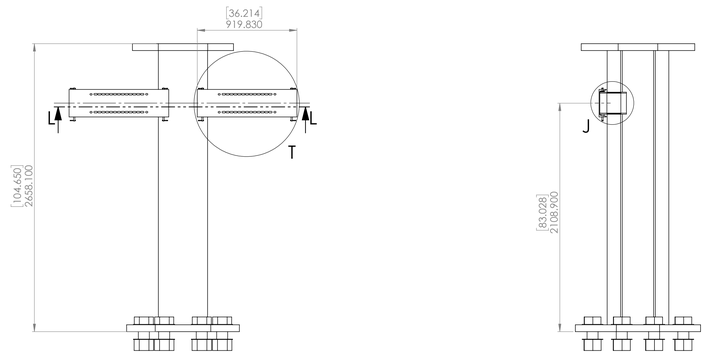

NORTH/SOUTH PANEL ATTACHMENT
RUNNING EAST TO WEST

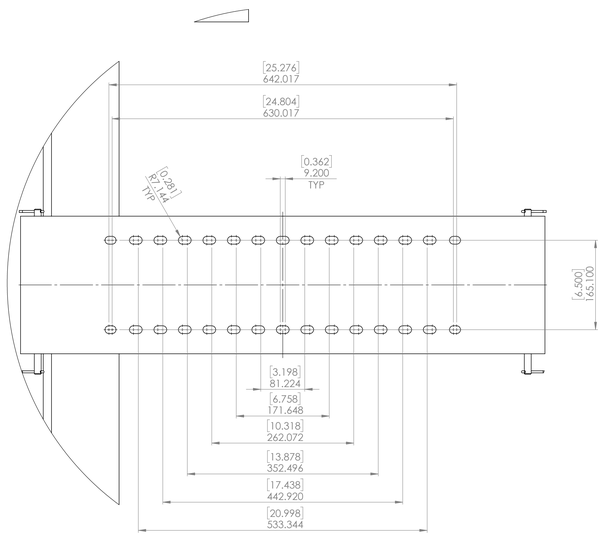

DETAIL S
SCALE 1 : 4

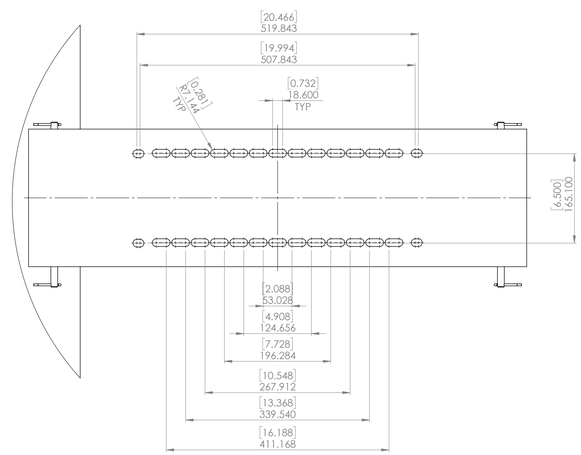

DETAIL T
SCALE 1 : 4

UNLESS OTHERWISE SPECIFIED:
DIMENSIONS: [MM] - [IN]]
ALL TOLERANCES:
MEASUREDS/GAGES: ±1 1/2[C] (59[F])
TOLERANCES: (+/-0.01[TE])

LOCATION: FRANCE, NORMANDY, DOZULE
THE HOLY HILL: 49°1'22.29"N 0°25'28.07"W
Aa: ARCHITECTURE, CLASS x
Ee: ELECTRICAL, CLASS x
Mm: MECHANICAL, CLASS x
Ss : STRUCTURAL, CLASS x

DEBURR AND
BREAK SHARP
EDGES

DO NOT SCALE DRAWING | REVISION

CREO DESIGN

	NAME	SIGNATURE	DATE
DRAWN			
CHK'D			
APPV'D			
MFG			
Q.A.			

MATERIAL: SEE NOTES
WEIGHT:

TITLE:
FOUNDATION SUB ASM
DESIGN CRITERIA
C10 CONFIGURATION
BEAM/S TO PANEL C10

DWG NO. C1-S1-0002 | A0
SCALE:1:20 | SHEET 2 OF 2